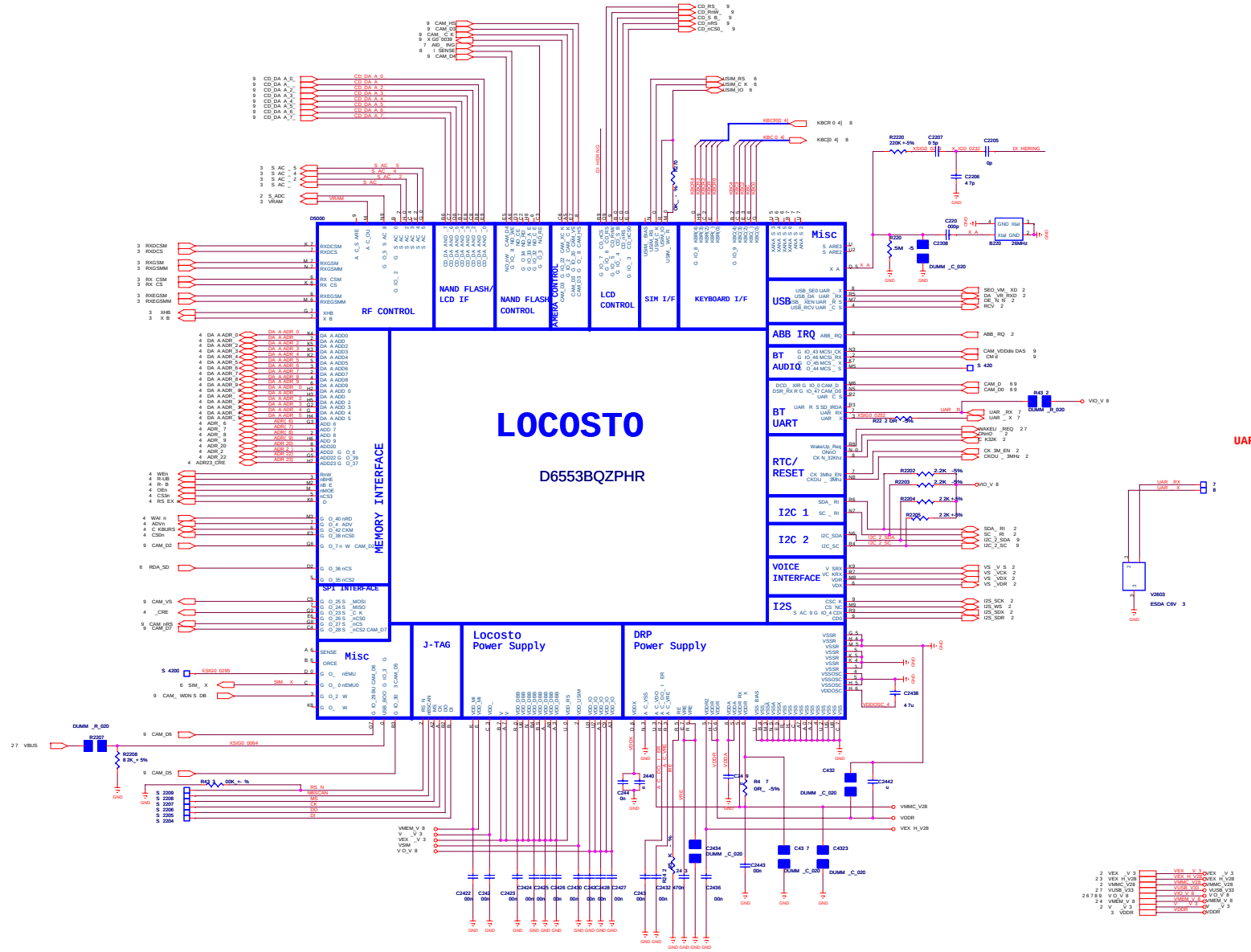

FIH		
File	1 Locosto	
Size A2	Document Number ANA	Rev 4 0
Date	Tu May 29 2007	Sheet 9

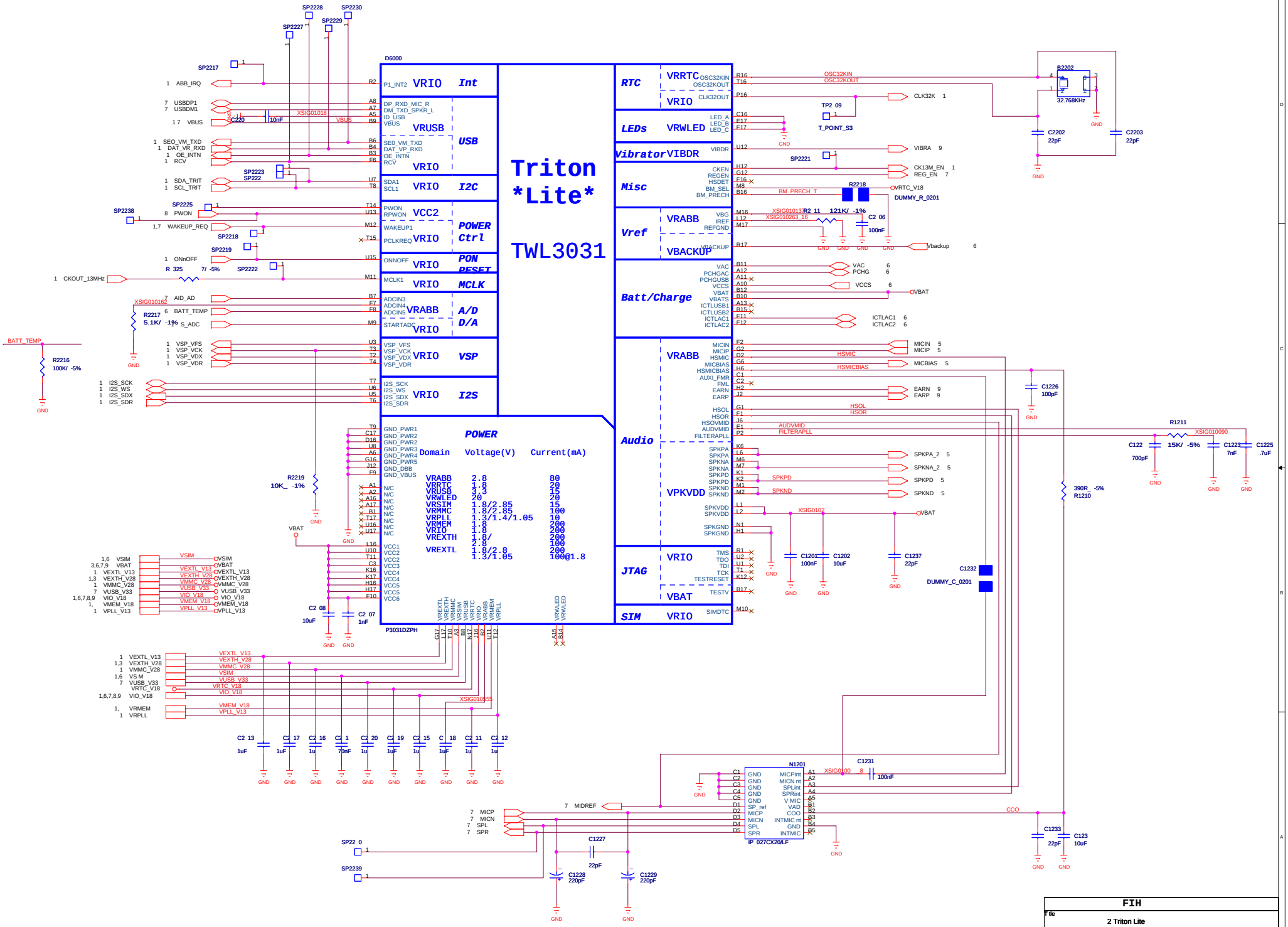
Triton *Lite*
TWL3031
D6000
P3031DZPH
RTC
LEDs
Vibrator
Misc
Vref
Batt/Charge
Audio
JTAG
SIM
VRIO
Int
USB
I2C
POWER Ctrl
PON RESET
MCLK
A/D D/A
VSP
I2S
POWER
Domain Voltage(V) Current(mA)
VRABB 2.8 80
VRRTC 1.8 20
VRUSB 3.3 15
VRWLED 20 20
VRSIM 1.8/2.85 15
VRMMC 1.8/2.85 100
VRPLL 1.3/1.4/1.05 10
VRMEM 1.8 200
VRIO 1.8 200
VREXTH 1.8/ 200
2.8 100
VREXTL 1.8/2.8 200
1.3/1.05 100@1.8
B2202
32.768KHz
CLK32K
VIBRA
CK13M_EN
REG_EN
VRTC_V18
DUMMY_R_0201
Vbackup
VAC
PCHG
VCCS
VBAT
ICTLAC1
ICTLAC2
MICIN
MICIP
MICBIAS
EARN
EARP
SPKPA_2
SPKNA_2
SPKPD
SPKND
DUMMY_C_0201
N1201
IP 027CX20LF
FIH
2 Triton Lite
ANA
Monday, June 25, 2007
Sheet 2 of 9

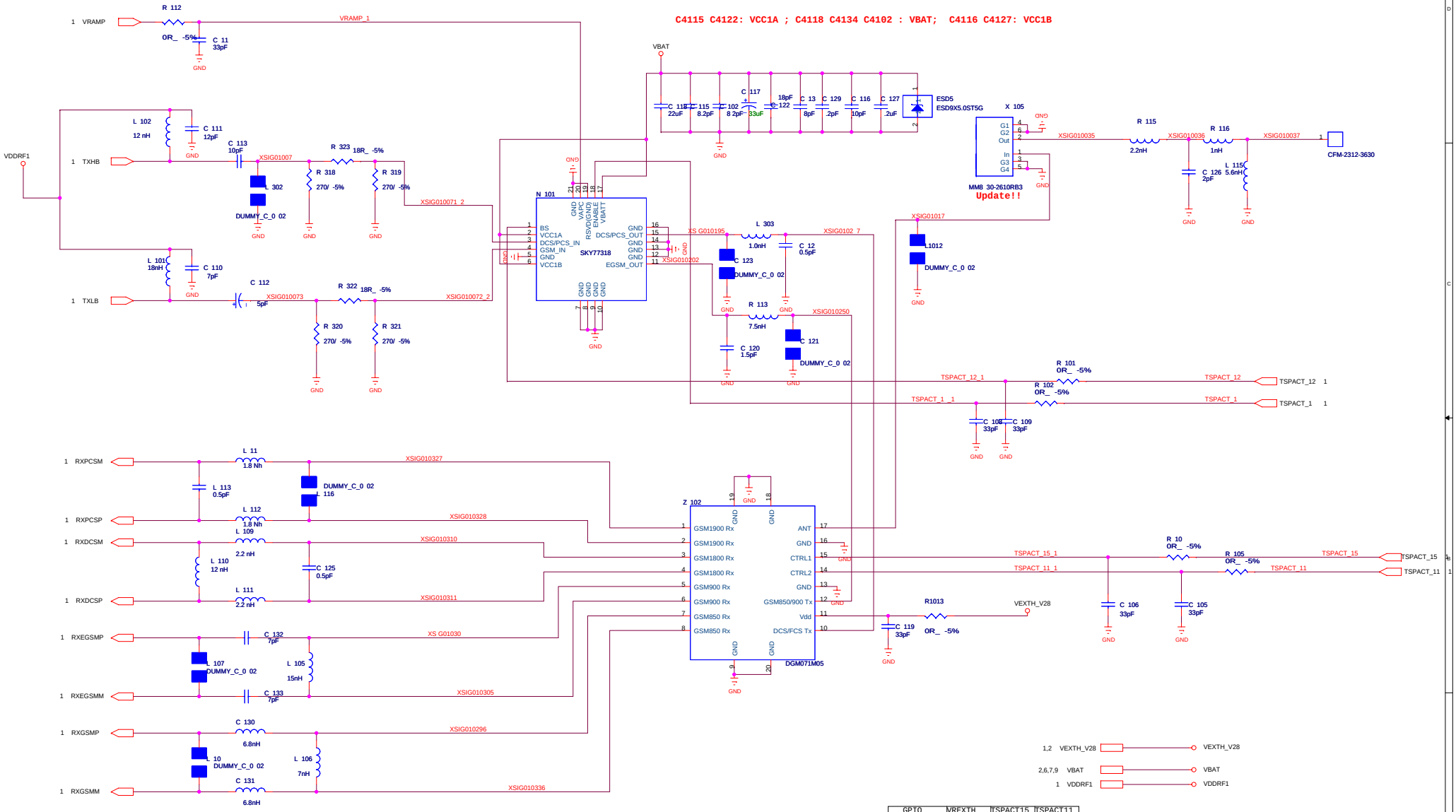

GPIO	VREXTH	TSPACT15	TSPACT11
RX-EGSM&GSM	1	1	0
RX-DCS&PCS	1	0	0
TX-EGSM&GSM	1	0	1
TX-DCS&PCS	1	1	1

FIH			
Title: 3 RF			
Size: A2	Document Number: ANA		Rev: .0
Date: Tuesday, June 26, 2007	Sheet 3 of 9		

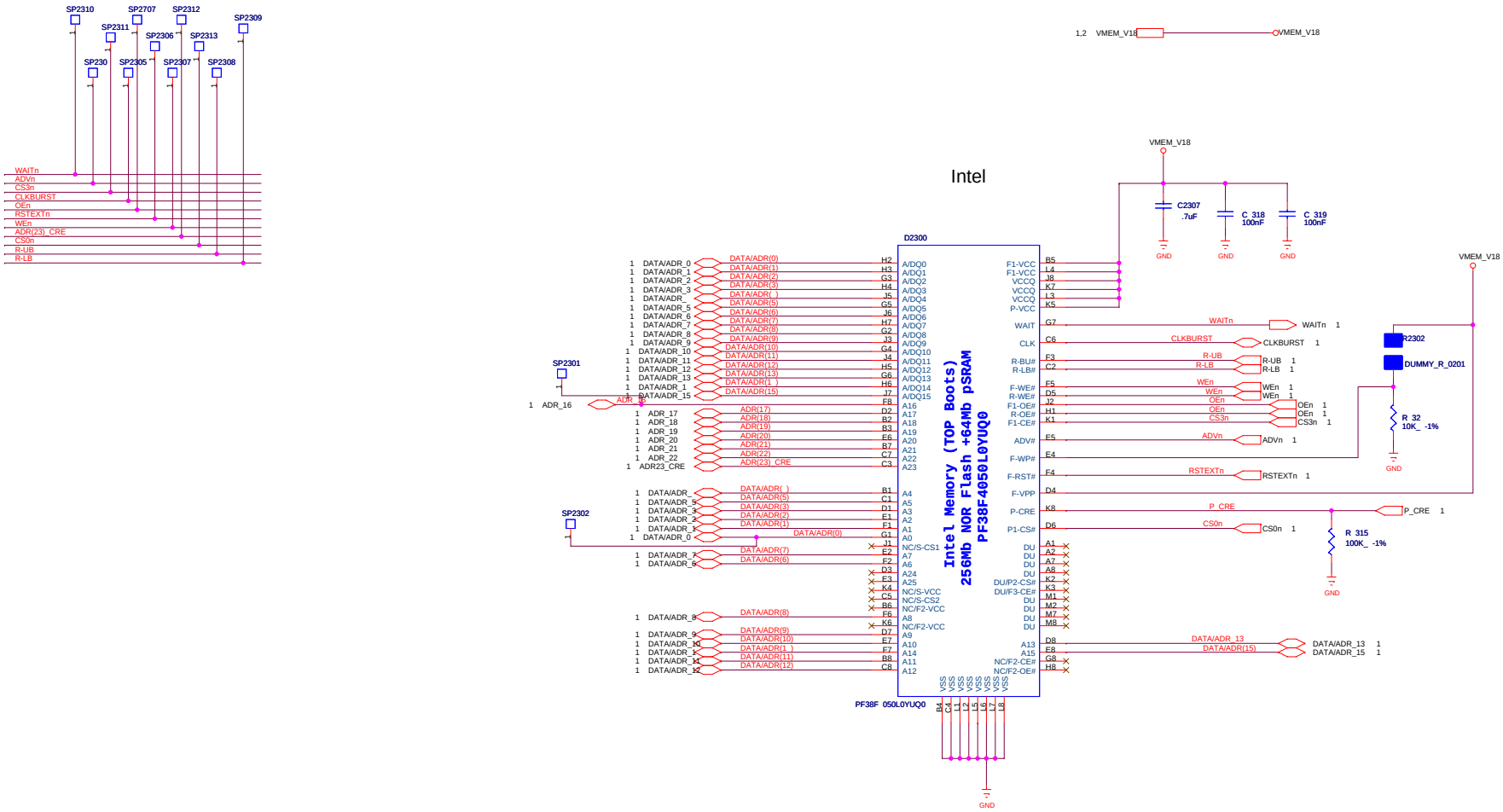

FIH		
Title: 4 Memory		
Size: A2	Document Number: ANA	Rev: .0
Date: Monday, June 25, 2007	Sheet of 9	

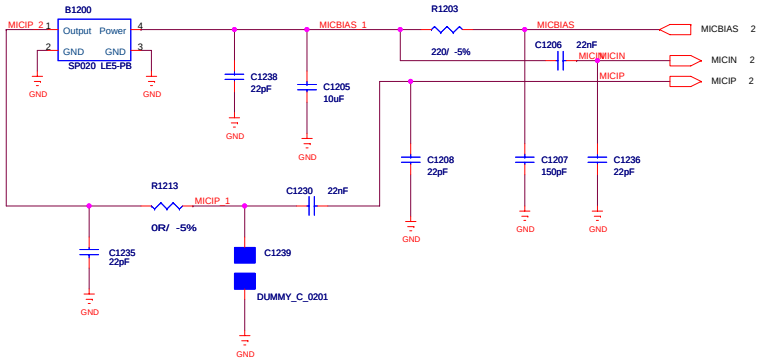

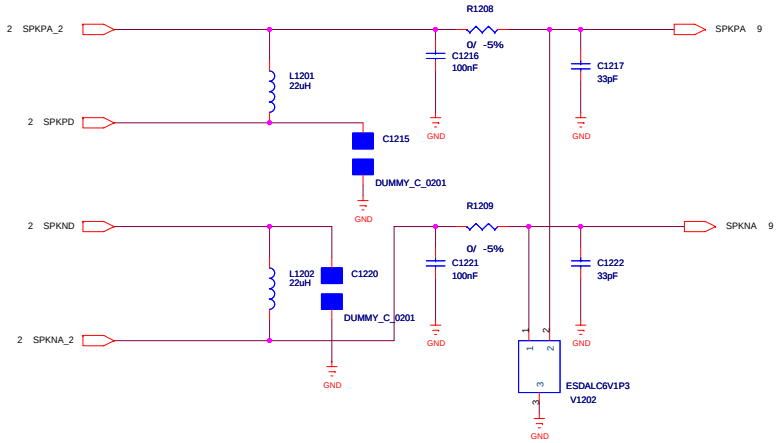

FIH		
Title: 5 Audio		
Size: A2	Document Number: ANA	Rev: .0
Date: Monday, June 25, 2007	Sheet 5 of 9	

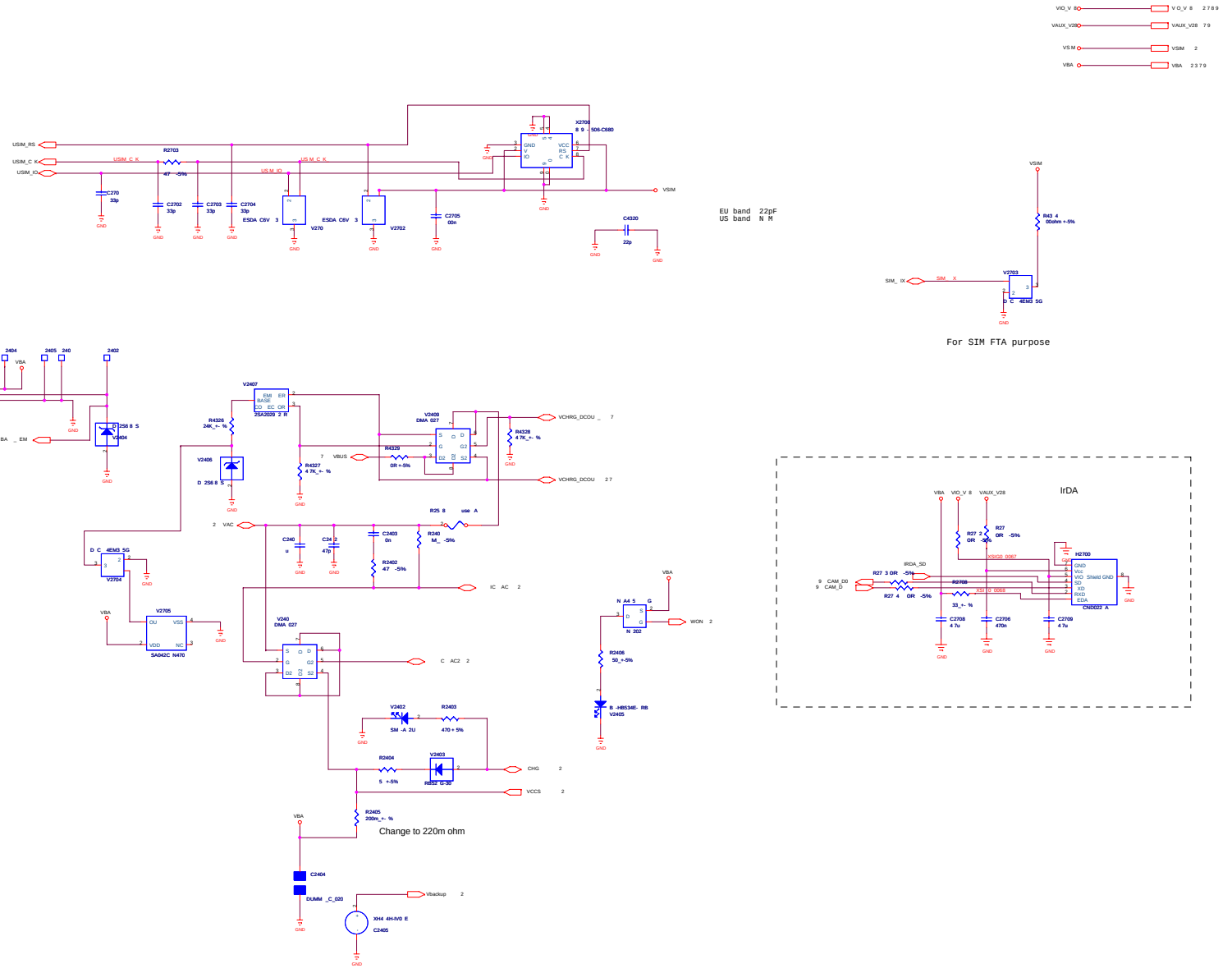

FIH			
File	6 Charger&/IO		
Size A2	Document Number ANA		rev 4 0
Date Monday une 25 2007		Sheet 5 o 9	

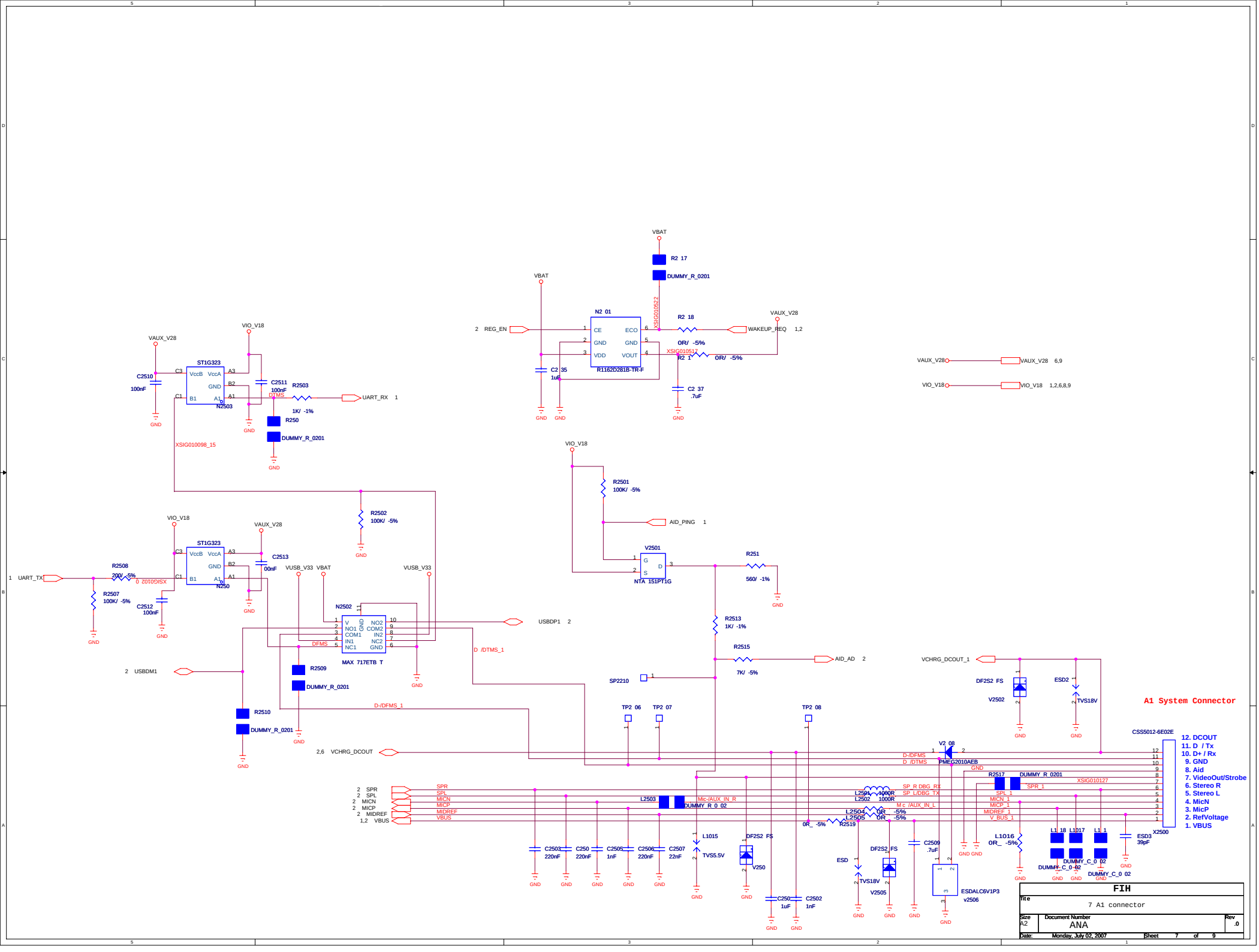

FIH			
Title	7 A1 connector		
Size A2	Document Number ANA		Rev .0
Date: Monday, July 02, 2007	Sheet 7 of 9		

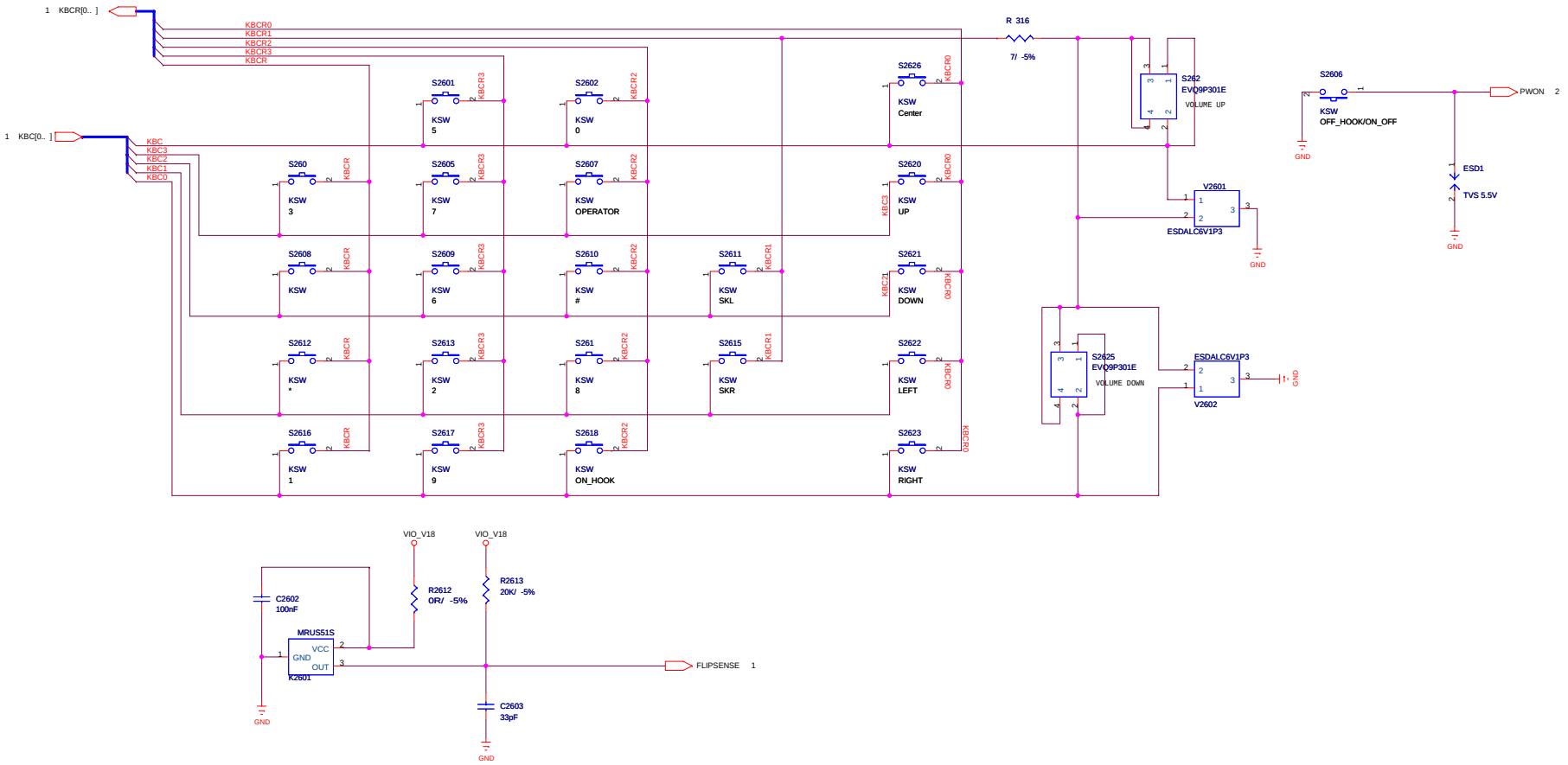

FIH		
Title: 8 Keypad		
Size: A2	Document Number: ANA	Rev: .0
Date: Monday, June 25, 2007	Sheet 8 of 9	

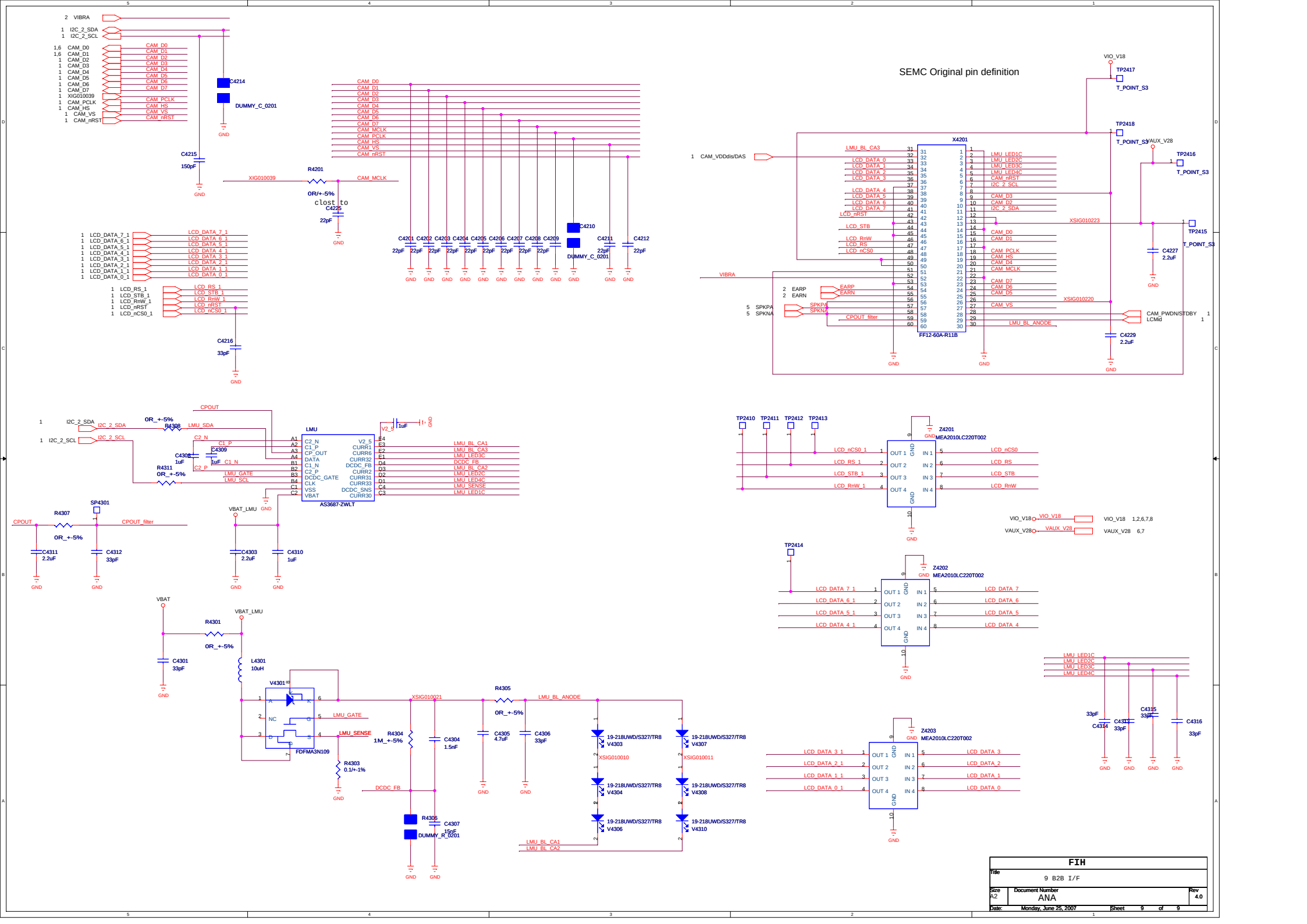
SEMC Original pin definition
X4201
FF12-60A-R11B
LMU
AS3687-ZWLT
Z4201
Z4202
Z4203
MEA2010LC220T002
FDFMA3N109
19-218UWD/S327/TR8
FIH
9 B2B I/F
ANA
Monday, June 25, 2007
Sheet 9 of 9
Rev 4.0